74LVX174

LOW VOLTAGE CMOS HEX D-TYPE FLIP-FLOP WITH CLEAR WITH 5V TOLERANT INPUTS

- HIGH SPEED:
  f_{MAX} = 180MHz (TYP.) at V_{CC} = 3.3V
- 5V TOLERANT INPUTS
- INPUT VOLTAGE LEVEL:
  V_{IL}=0.8V, V_{IH}=2V at V_{CC}=3V
- LOW POWER DISSIPATION:
  I_{CC} = 4 µA (MAX.) at T_A=25°C
- LOW NOISE:
  V_{OLP} = 0.3V (TYP.) at V_{CC} = 3.3V
- SYMMETRICAL OUTPUT IMPEDANCE:
  $|I_{OH}| = I_{OL}$ = 4mA (MIN)
- BALANCED PROPAGATION DELAYS:
  $t_{PLH} \cong t_{PHL}$
- OPERATING VOLTAGE RANGE:
  V_{CC}(OPR) = 2V to 3.6V (1.2V Data Retention)
- PIN AND FUNCTION COMPATIBLE WITH 74 SERIES 174
- IMPROVED LATCH-UP IMMUNITY
- POWER DOWN PROTECTION ON INPUTS

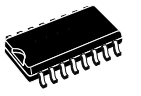

SOP



TSSOP

Table 1: Order Codes

PACKAGE	T & R
SOP	74LVX174MTR
TSSOP	74LVX174TTR

DESCRIPTION

The 74LVX174 is a low voltage CMOS HEX D-TYPE FLIP FLOP WITH CLEAR NON INVERTING fabricated with sub-micron silicon gate and double-layer metal wiring C^2MOS technology. It is ideal for low power, battery operated and low noise 3.3V applications.

Information signals applied to D inputs are transferred to the Q outputs on the positive going edge of the clock pulse.
When the CLEAR input is held low, the Q outputs are held low independently of the other inputs.
Power down protection is provided on all inputs and 0 to 7V can be accepted on inputs with no regard to the supply voltage.
This device can be used to interface 5V to 3V system. It combines high speed performance with the true CMOS low power consumption.
All inputs and outputs are equipped with protection circuits against static discharge, giving them 2KV ESD immunity and transient excess voltage.

Obsolete Product(s) - Obsolete Product(s)

Figure 1: Pin Connection And IEC Logic Symbols

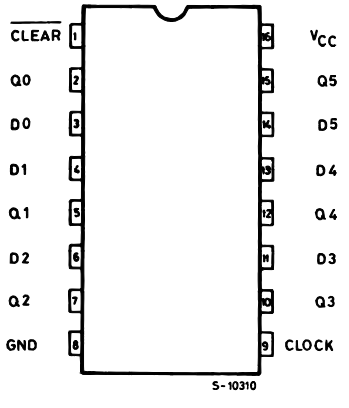

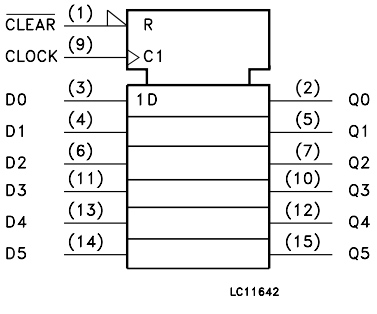

Figure 2: Input Equivalent Circuit

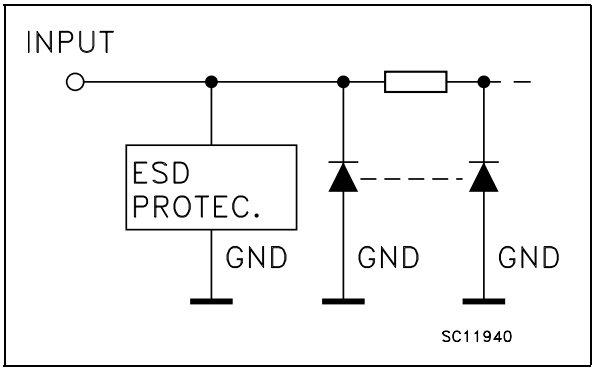

Table 2: Pin Description

PIN N°	SYMBOL	NAME AND FUNCTION
1	$\overline{CLEAR}$	Asynchronous Master Reset (Active LOW)
2, 5, 7, 10, 12, 15	Q0 to Q5	Flip-Flop Outputs
3, 4, 6, 11, 13, 14	D0 to D5	Data Inputs
9	CLOCK	Clock Input (LOW-to-HIGH, Edge Triggered)
8	GND	Ground (0V)
16	V_{CC}	Positive Supply Voltage

Table 3: Truth Table

INPUTS			OUTPUTS	FUNCTION
$\overline{CLEAR}$	D	CLOCK	Q	
L	X	X	L	CLEAR
H	L	⌐	L	
H	H	⌐	H	
H	X	¬	Q_n	NO CHANGE

X : Don't Care

Figure 3: Logic Diagram

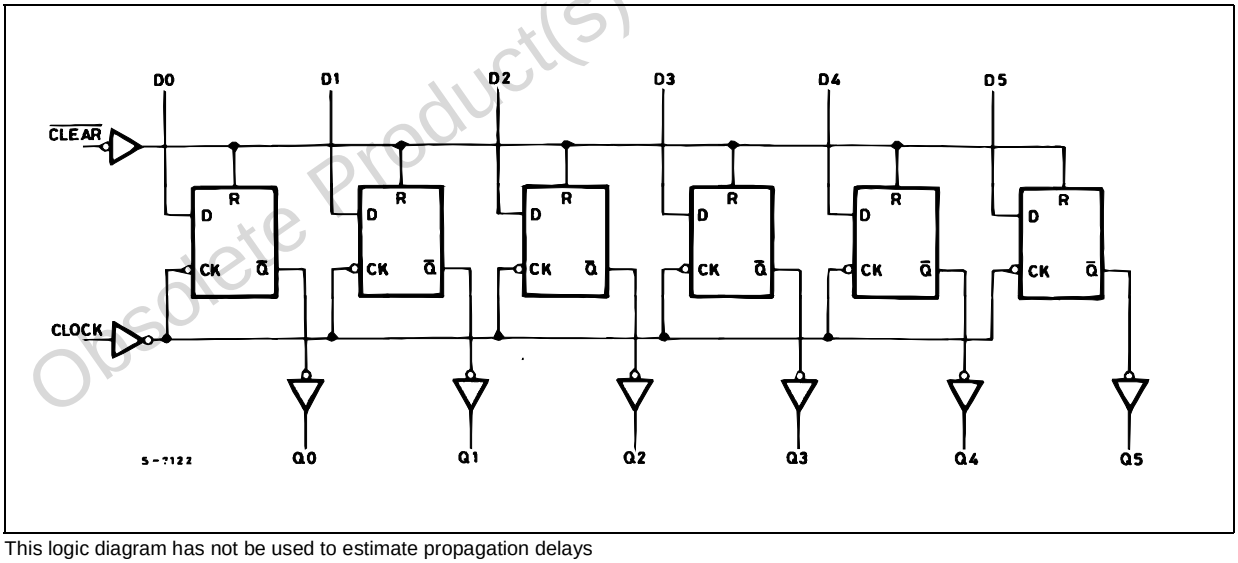

This logic diagram has not be used to estimate propagation delays

Obsolete Product(s) - Obsolete Product(s)

Table 4: Absolute Maximum Ratings

Symbol	Parameter	Value	Unit
V_{CC}	Supply Voltage	-0.5 to +7.0	V
V_I	DC Input Voltage	-0.5 to +7.0	V
V_O	DC Output Voltage	-0.5 to V_{CC} + 0.5	V
I_{IK}	DC Input Diode Current	- 20	mA
I_{OK}	DC Output Diode Current	± 20	mA
I_O	DC Output Current	± 25	mA
I_{CC} or I_{GND}	DC V_{CC} or Ground Current	± 50	mA
T_{stg}	Storage Temperature	-65 to +150	°C
T_L	Lead Temperature (10 sec)	300	°C

Absolute Maximum Ratings are those values beyond which damage to the device may occur. Functional operation under these conditions is not implied.

Table 5: Recommended Operating Conditions

Symbol	Parameter	Value	Unit
V_{CC}	Supply Voltage (note 1)	2 to 3.6	V
V_I	Input Voltage	0 to 5.5	V
V_O	Output Voltage	0 to V_{CC}	V
T_{op}	Operating Temperature	-55 to 125	°C
dt/dv	Input Rise and Fall Time (note 2) (V_{CC} = 3.3V)	0 to 100	ns/V

1) Truth Table guaranteed: 1.2V to 3.6V
2) V_{IN} from 0.8V to 2.0V

Table 6: DC Specifications

Symbol	Parameter	Test Condition		Value							Unit
		V_{CC} (V)		T_A = 25°C			-40 to 85°C		-55 to 125°C		
				Min.	Typ.	Max.	Min.	Max.	Min.	Max.	
V_{IH}	High Level Input Voltage	2.0		1.5			1.5		1.5		V
		3.0		2.0			2.0		2.0		
		3.6		2.4			2.4		2.4		
V_{IL}	Low Level Input Voltage	2.0				0.5		0.5		0.5	V
		3.0				0.8		0.8		0.8	
		3.6				0.8		0.8		0.8	
V_{OH}	High Level Output Voltage	2.0	I_O=-50 µA	1.9	2.0		1.9		1.9		V
		3.0	I_O=-50 µA	2.9	3.0		2.9		2.9		
		3.0	I_O=-4 mA	2.58			2.48		2.4		
V_{OL}	Low Level Output Voltage	2.0	I_O=50 µA		0.0	0.1		0.1		0.1	V
		3.0	I_O=50 µA		0.0	0.1		0.1		0.1	
		3.0	I_O=4 mA			0.36		0.44		0.55	
I_I	Input Leakage Current	3.6	V_I = 5V or GND			± 0.1		± 1		± 1	µA
I_{CC}	Quiescent Supply Current	3.6	V_I = V_{CC} or GND			4		40		40	µA

Obsolete Product(s) - Obsolete Product(s)

Table 7: Dynamic Switching Characteristics

Symbol	Parameter	Test Condition		Value							Unit
		V_{CC} (V)		T_A = 25°C			-40 to 85°C		-55 to 125°C		
				Min.	Typ.	Max.	Min.	Max.	Min.	Max.	
V_{OLP}	Dynamic Low Voltage Quiet Output (note 1, 2)	3.3	C_L = 50 pF		0.3	0.8					V
V_{OLV}				-0.8	-0.3						
V_{IHD}	Dynamic High Voltage Input (note 1, 3)	3.3		2							
V_{ILD}	Dynamic Low Voltage Input (note 1, 3)	3.3				0.8					

1) Worst case package.
2) Max number of outputs defined as (n). Data inputs are driven 0V to 3.3V, (n-1) outputs switching and one output at GND.
3) Max number of data inputs (n) switching. (n-1) switching 0V to 3.3V. Inputs under test switching: 3.3V to threshold (V_{ILD}), 0V to threshold (V_{IHD}), f=1MHz.

Table 8: AC Electrical Characteristics (Input $t_r = t_f$ = 3ns)

Symbol	Parameter	Test Condition			Value							Unit
		V_{CC} (V)	C_L (pF)		T_A = 25°C			-40 to 85°C		-55 to 125°C		
					Min.	Typ.	Max.	Min.	Max.	Min.	Max.	
t_{PLH} t_{PHL}	Propagation Delay Time CLOCK to Q	2.7	15			7.6	14.5	1.0	17.5	1.0	18.5	ns
		2.7	50			10.1	18.0	1.0	21.0	1.0	22.0	
		3.3(*)	15			5.9	9.3	1.0	11.0	1.0	12.0	
		3.3(*)	50			8.4	12.8	1.0	14.5	1.0	15.5	
t_{PLH} t_{PHL}	Propagation Delay Time $\overline{\text{CLEAR}}$ to Q	2.7	15			7.9	15.0	1.0	18.5	1.0	19.5	ns
		2.7	50			10.4	18.5	1.0	22.0	1.0	23.0	
		3.3(*)	15			6.2	9.7	1.0	11.5	1.0	12.5	
		3.3(*)	50			8.7	13.2	1.0	15.0	1.0	16.0	
t_{WL}	$\overline{\text{CLEAR}}$ pulse Width, HIGH	2.7				6.5			7.5		7.5	ns
		3.3(*)				5.0			5.0		5.0	
t_W	CLOCK pulse Width	2.7				6.5			7.5		7.5	ns
		3.3(*)				5.0			5.0		5.0	
t_S	Setup Time Q to CLOCK HIGH or LOW	2.7				7.5			8.5		8.5	ns
		3.3(*)				5.0			6.0		6.0	
t_h	Hold Time Q to CLOCK HIGH or LOW	2.7				0.0			0.0		0.0	ns
		3.3(*)				0.0			0.0		0.0	
t_{REM}	Recovery Time $\overline{\text{CLEAR}}$ to Q	2.7				4.5			4.5			ns
		3.3(*)				3.0			3.0			
f_{MAX}	Maximum Clock Frequency	2.7	15		65	130		55				MHz
		2.7	50		45	60		40				
		3.3(*)	15		115	180		95				
		3.3(*)	50		65	95		55				
t_{OSLH} t_{OSHL}	Output To Output Skew Time (note1, 2)	2.7	50			0.5	1.0		1.5		1.5	ns
		3.3(*)	50			0.5	1.0		1.5		1.5	

1) Skew is defined as the absolute value of the difference between the actual propagation delay for any two outputs of the same device switching in the same direction, either HIGH or LOW
2) Parameter guaranteed by design (*) Voltage range is 3.3V ± 0.3V

Obsolete Product(s) - Obsolete Product(s)

Table 9: Capacitive Characteristics

Symbol	Parameter	Test Condition		Value							Unit
		V_{CC} (V)		T_A = 25°C			-40 to 85°C		-55 to 125°C		
				Min.	Typ.	Max.	Min.	Max.	Min.	Max.	
C_{IN}	Input Capacitance	3.3			5			10		10	pF
C_{PD}	Power Dissipation Capacitance (note 1)	3.3	f_{IN} = 10MHz		23						pF

1) C_{PD} is defined as the value of the IC's internal equivalent capacitance which is calculated from the operating current consumption without load. (Refer to Test Circuit). Average operating current can be obtained by the following equation. $I_{CC(opr)} = C_{PD} \times V_{CC} \times f_{IN} + I_{CC}/n$ (per circuit)

Figure 4: Test Circuit

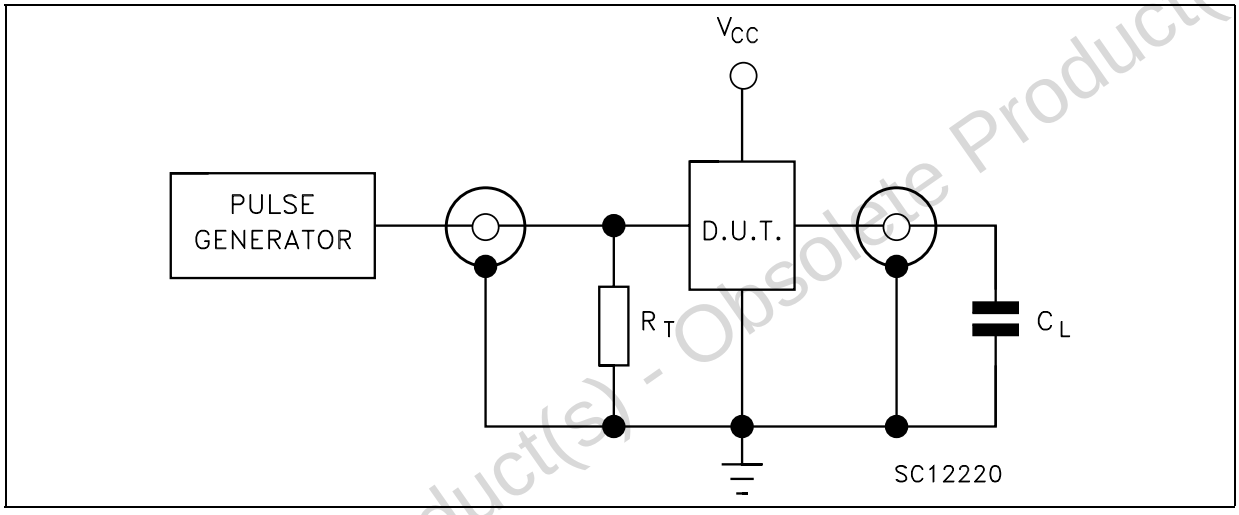

C_L =15/50pF or equivalent (includes jig and probe capacitance)
$R_T = Z_{OUT}$ of pulse generator (typically 50Ω)

Figure 5: Waveform - Propagation Delays (f=1MHz; 50% duty cycle)

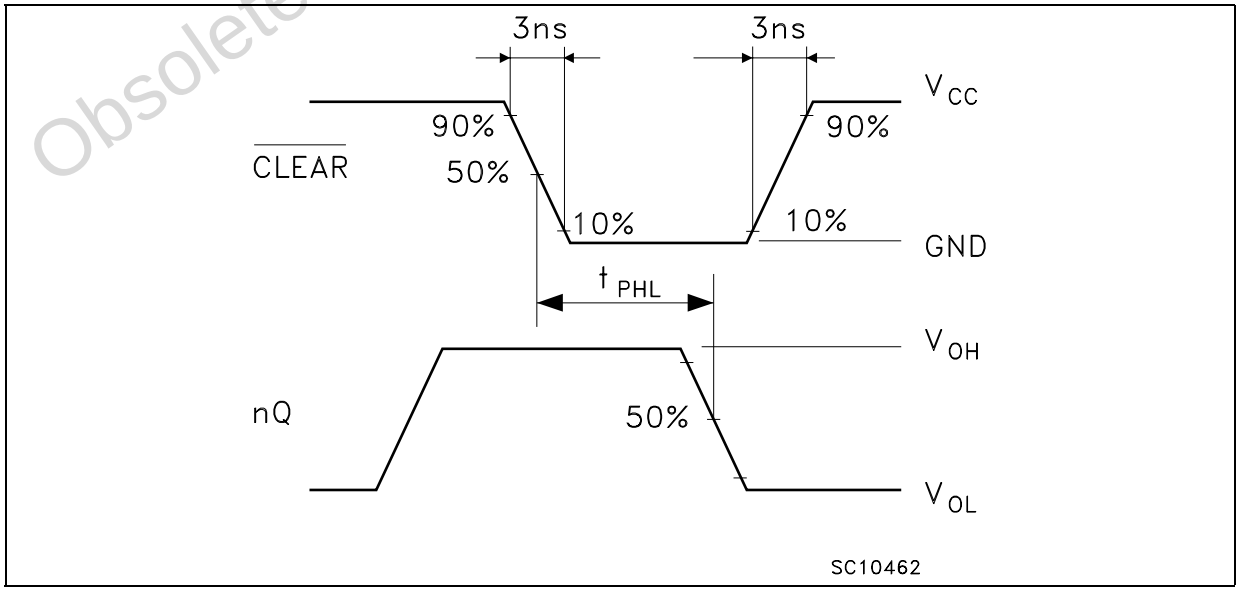

Obsolete Product(s) - Obsolete Product(s)

Figure 6: Waveform - Propagation Delays, Setup And Hold Times (f=1MHz; 50% duty cycle)

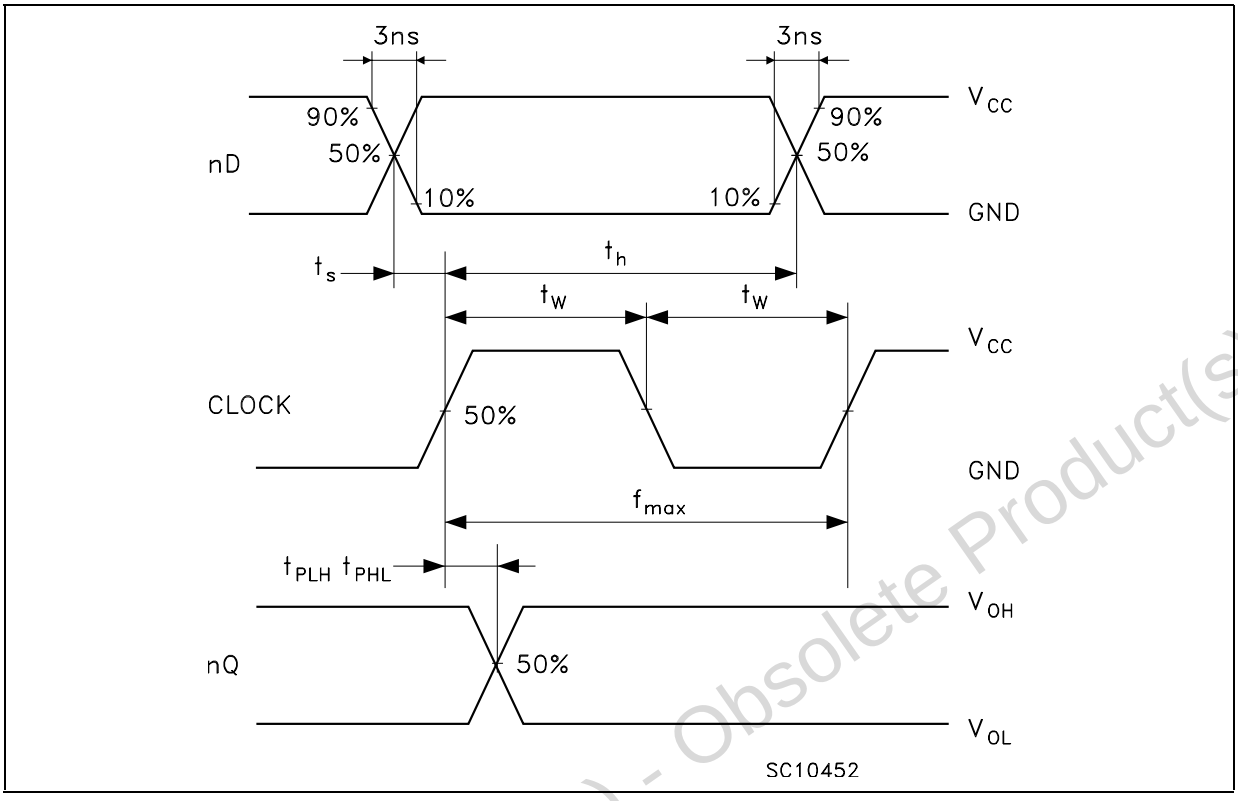

Figure 7: Waveform - Recovery Time, Minimum Pulse Width (f=1MHz; 50% duty cycle)

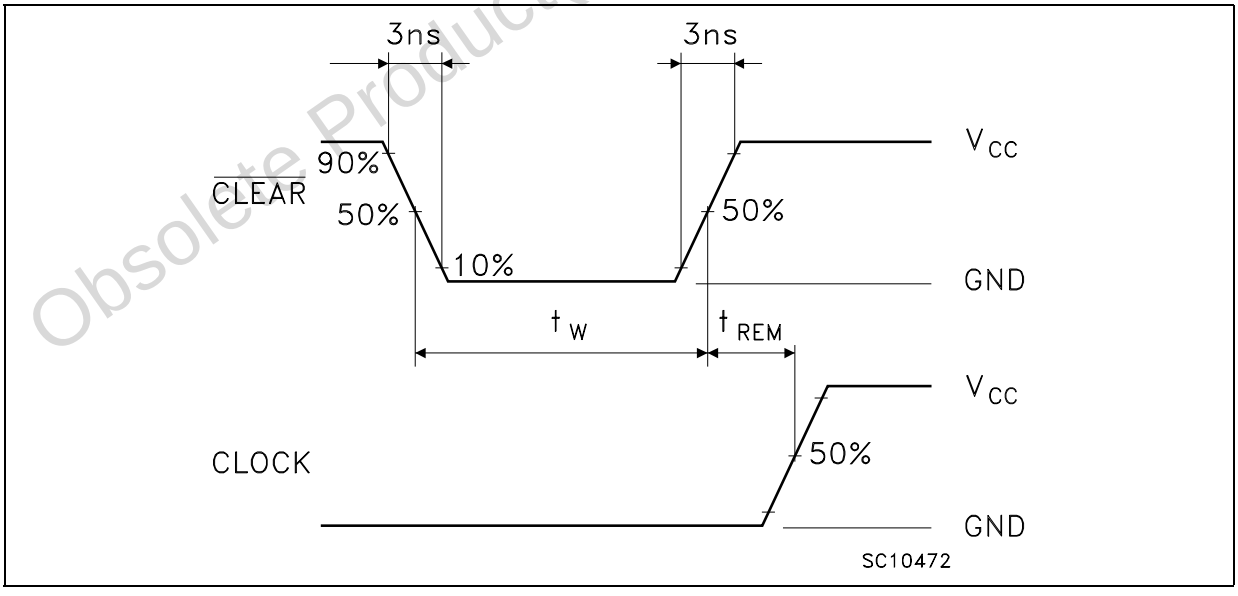

Obsolete Product(s) - Obsolete Product(s)

SO-16 MECHANICAL DATA

DIM.	mm.			inch		
	MIN.	TYP	MAX.	MIN.	TYP.	MAX.
A			1.75			0.068
a1	0.1		0.25	0.004		0.010
a2			1.64			0.063
b	0.35		0.46	0.013		0.018
b1	0.19		0.25	0.007		0.010
C		0.5			0.019	
c1	45° (typ.)					
D	9.8		10	0.385		0.393
E	5.8		6.2	0.228		0.244
e		1.27			0.050	
e3		8.89			0.350	
F	3.8		4.0	0.149		0.157
G	4.6		5.3	0.181		0.208
L	0.5		1.27	0.019		0.050
M			0.62			0.024
S	8° (max.)					

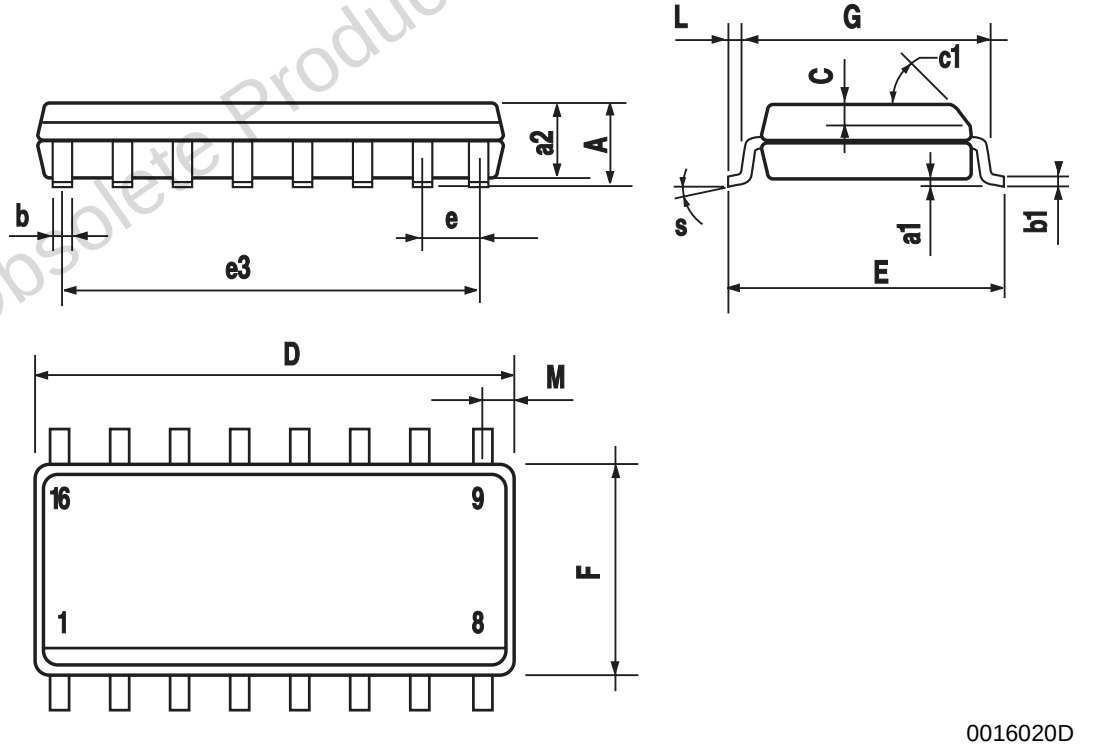

0016020D

Obsolete Product(s) - Obsolete Product(s)

TSSOP16 MECHANICAL DATA

DIM.	mm.			inch		
	MIN.	TYP	MAX.	MIN.	TYP.	MAX.
A			1.2			0.047
A1	0.05		0.15	0.002	0.004	0.006
A2	0.8	1	1.05	0.031	0.039	0.041
b	0.19		0.30	0.007		0.012
c	0.09		0.20	0.004		0.0079
D	4.9	5	5.1	0.193	0.197	0.201
E	6.2	6.4	6.6	0.244	0.252	0.260
E1	4.3	4.4	4.48	0.169	0.173	0.176
e		0.65 BSC			0.0256 BSC	
K	0°		8°	0°		8°
L	0.45	0.60	0.75	0.018	0.024	0.030

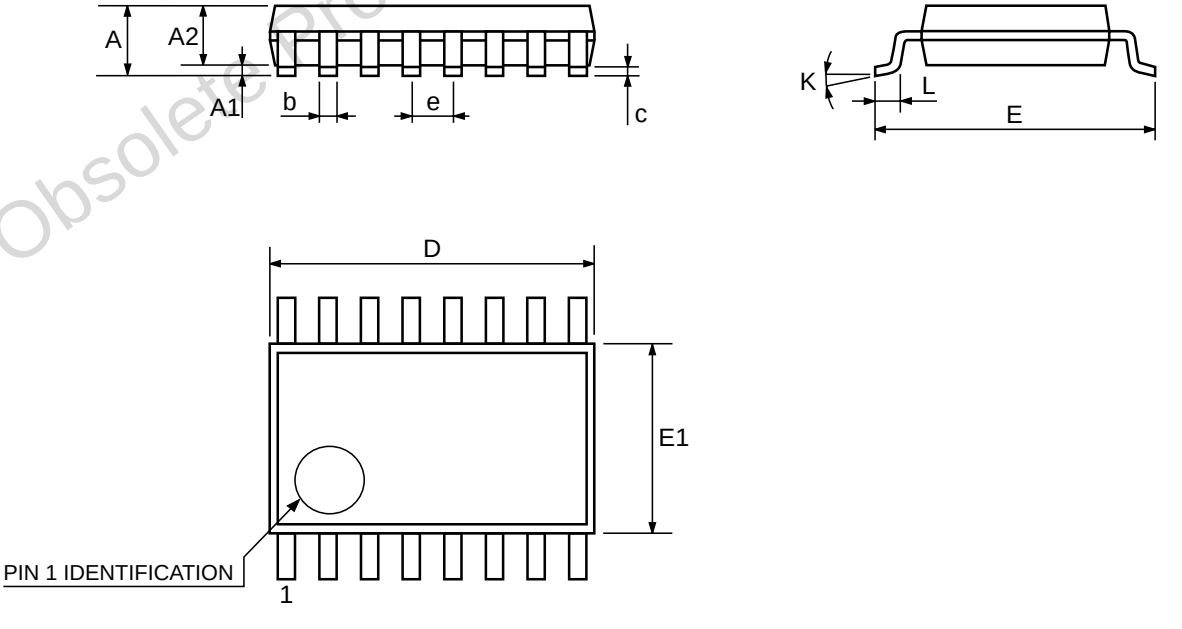

0080338D

Obsolete Product(s) - Obsolete Product(s)

Tape & Reel SO-16 MECHANICAL DATA

DIM.	mm.			inch		
	MIN.	TYP	MAX.	MIN.	TYP.	MAX.
A			330			12.992
C	12.8		13.2	0.504		0.519
D	20.2			0.795		
N	60			2.362		
T			22.4			0.882
Ao	6.45		6.65	0.254		0.262
Bo	10.3		10.5	0.406		0.414
Ko	2.1		2.3	0.082		0.090
Po	3.9		4.1	0.153		0.161
P	7.9		8.1	0.311		0.319

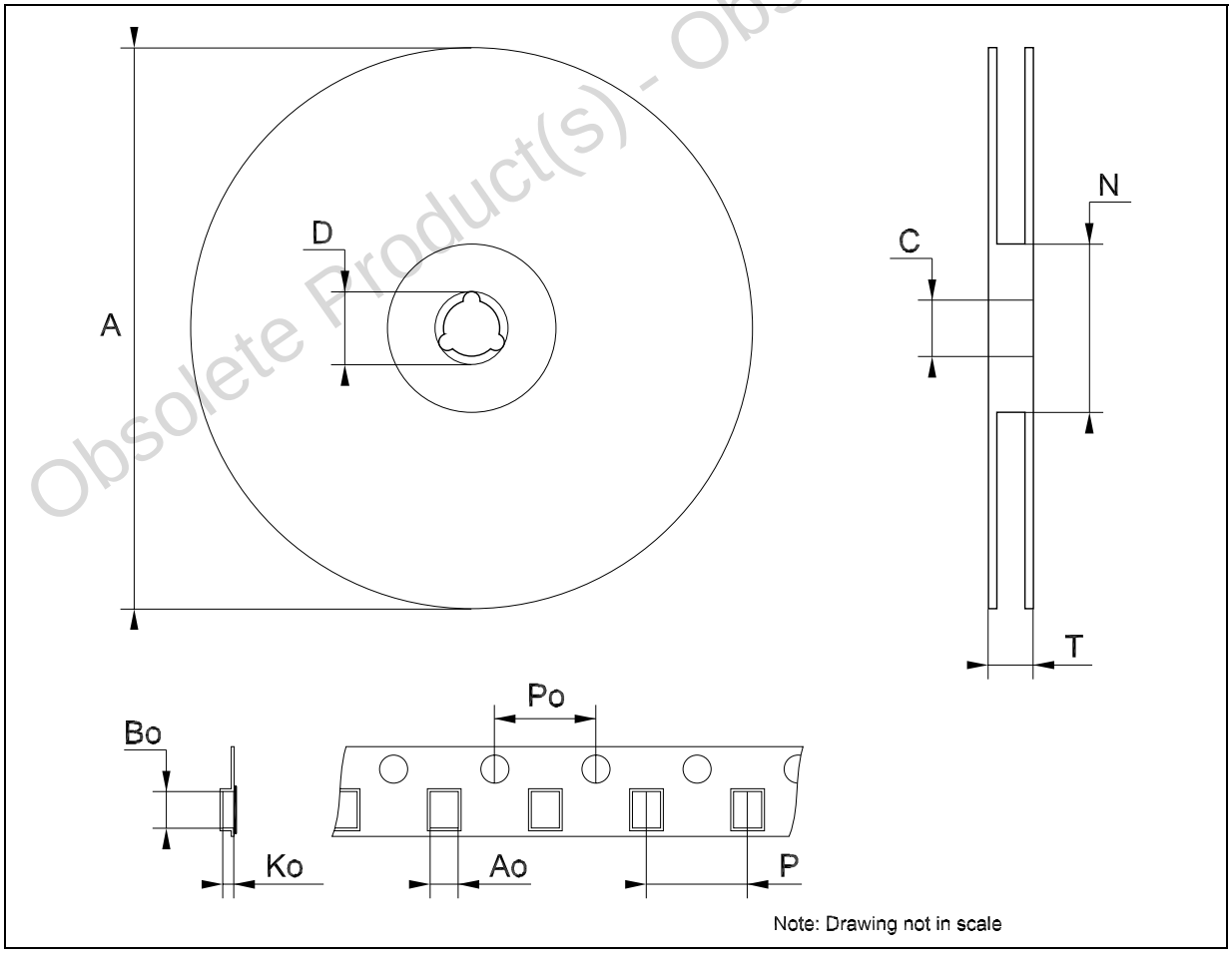

Note: Drawing not in scale

Obsolete Product(s) - Obsolete Product(s)

Tape & Reel TSSOP16 MECHANICAL DATA

DIM.	mm.			inch		
	MIN.	TYP	MAX.	MIN.	TYP.	MAX.
A			330			12.992
C	12.8		13.2	0.504		0.519
D	20.2			0.795		
N	60			2.362		
T			22.4			0.882
Ao	6.7		6.9	0.264		0.272
Bo	5.3		5.5	0.209		0.217
Ko	1.6		1.8	0.063		0.071
Po	3.9		4.1	0.153		0.161
P	7.9		8.1	0.311		0.319

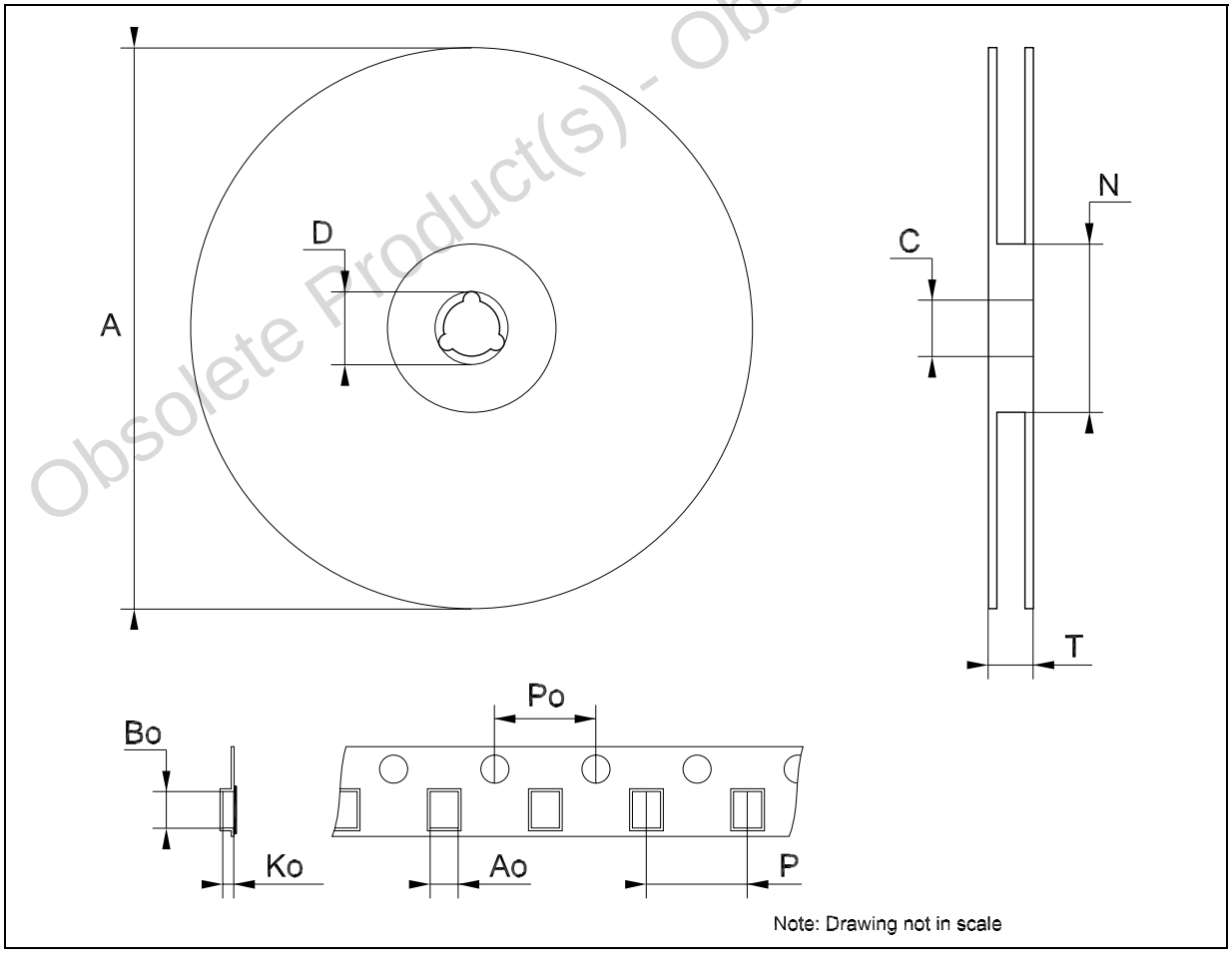

Note: Drawing not in scale

Obsolete Product(s) - Obsolete Product(s)

Table 10: Revision History

Date	Revision	Description of Changes
27-Aug-2004	3	Ordering Codes Revision - pag. 1.

Obsolete Product(s) - Obsolete Product(s)

Obsolete Product(s) - Obsolete Product(s)

Information furnished is believed to be accurate and reliable. However, STMicroelectronics assumes no responsibility for the consequences of use of such information nor for any infringement of patents or other rights of third parties which may result from its use. No license is granted by implication or otherwise under any patent or patent rights of STMicroelectronics. Specifications mentioned in this publication are subject to change without notice. This publication supersedes and replaces all information previously supplied. STMicroelectronics products are not authorized for use as critical components in life support devices or systems without express written approval of STMicroelectronics.

The ST logo is a registered trademark of STMicroelectronics

All other names are the property of their respective owners

© 2004 STMicroelectronics - All Rights Reserved

STMicroelectronics group of companies

Australia - Belgium - Brazil - Canada - China - Czech Republic - Finland - France - Germany - Hong Kong - India - Israel - Italy - Japan - Malaysia - Malta - Morocco - Singapore - Spain - Sweden - Switzerland - United Kingdom - United States of America

www.st.com